Viva Frame

Family Tent, Ridge, Framed

Easy to set up | Waterproof | UV stabilised | All climates | Logo customisable

› Key Features

- Protect against water, rot and UV exposure
- Set up quickly with minimal personnel
- Connect two tents lengthwise using the symmetrical flaps to create larger units
- Provide reliable shelter for emergency situations in all climates
- Accommodate up to 5 people

› Dimensions

Centre height	2.4 m
Width	4.15 m
Ridge length	4 m
Side wall height	1.50 m
Door height	1.6 m
Centre base length	5.2 m

Front doors (width and height)

Size	1.5 x 1.5 m
Door flaps	1.5 x 1.6 m
Upper part	1.5 x 1.08 m (made of canvas)
Lower part	1.5 x 0.52 m (made of woven PE)

Rear doors (width and height)

Size	1.0 x 2.1 m
Door flaps	1.0 x 2.1 m
Upper part	1.0 x 1.58 m (made of canvas)
Lower part	1.0 x 0.52 m (made of woven PE)

› Graphic Reference

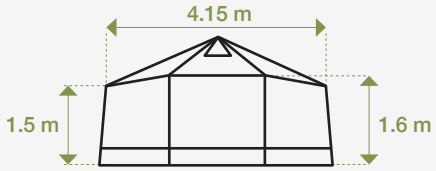

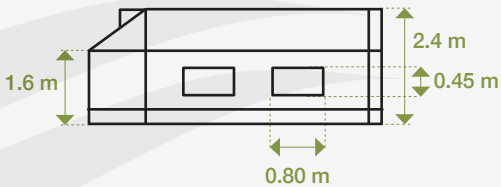

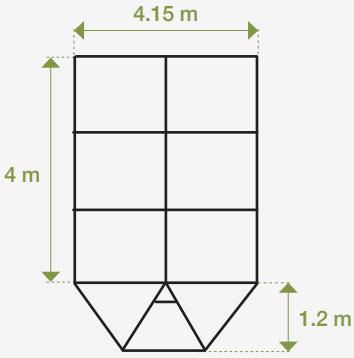

NRS Relief

www.nrsrelief.com

Viva Frame

Family Tent, Ridge, Framed

Easy to set up | Waterproof | UV stabilised | All climates | Logo customisable

› Materials

Outer tent	» Polyester and cotton blended fibres yarns. Cotton: 40% (±10), polyester: 60% (±10) » Weight: 350 g/m² (±15%), colour: natural white, not dyed
Inner tent	» Polyester and cotton blended fibres yarns. Cotton: 40% (±10), polyester: 60% (±10) » Weight: 130 g/m² (±10%), colour: dyed sand or cream
All PE parts	» Base fabric: Woven, high-density polyethylene black fibres, fabric laminated on both sides with low-density polyethylene coating » Weight: 190 g/m² (±10%) » Tensile strength: warp and weft 650 N minimum » Tear strength: warp 100 N minimum, weft 100 N minimum
Ground sheet	» Woven polyethylene fabric, coated on both sides with low-density polyethylene » Weight: 190 g/m² (±10%)

› Tent Parts

Inner tent	The inner tent is square in shape and is hanging inside the outer tent structure and is hooked to the frame
Chimney	A chimney reinforcement with non-perforated opening is placed at the side wall corresponding the chimney reinforcement of the outer fold. This is made of heat resistant fabric (minimum 900°C)
Partition	One inner partition made of the same material as the inner tent. The partition runs from one side wall to the opposite side wall, in order to divide the inner tent in two equal parts
Ventilators	The inner tent has 2 triangular vents at each gabble top, made of mosquito net and reinforced with 20 mm webbings

› Packing and Shipping

Dimension of loaded cage	220 x 119 x 113 cm
Volume of loaded cage	2.95 m³
Weight of loaded cage	925 kg
Dimension of bale	215 x 40 x 35 cm
Volume of bale	0.301 m³
Weight of bale	98.6 kg

› Estimated Loadability[1]

Containers	Unpalletised	Steel Cages
20' GP	96 tents	90 tents
40' DC	196 tents	180 tents
40' HC	224 tents	180 tents

[1] *The loadability provided is based on the maximum volume and weight capacity of the containers. This might change due to road weight restrictions in the country of destination. Please contact our sales team for further clarifications.*

NRS Relief
www.nrsrelief.com